Rockcore Electronics



Smart Micro Inverter

MI2S-600D/700D/800D

User Manual

www.rockcore.com.cn

Version NO.2000-A01

Attention:

This manual include important instructions to follow during installation and maintenance of MI2S-800D series micro inverter. Please read this manual thoroughly before installing or commissioning the device. For safety, the system must be installed, operated, repaired, and maintained by trained and qualified personnel in accordance with the requirements described in this document.

Product information is subject to change without prior notice.

It will be modified always， please refer to our website www.rockcore.com.cn to get the latest vertion.

Security Marks Note:

Mark	Note
 DANGER	Indicates a hazard that may cause a fatal electric shock, other serious injury, or fire.

Mark	Note
 WARNING	To avoid potential safety hazards (including equipment damage and personal injury), you must fully understand and follow the instructions. WARNING

Mark	Note
 CAUTION	Indicates that this operation is prohibited.The reader should stop the operation and proceed only with full care and understanding of the operation.

CONTENT

01 Summary ---------- 05

02 Product Feature ---------- 05

03 Terminal Introduction ---------- 06

04 Micro inverter system description ---------- 07

05 Installation Preparation ---------- 08

- 5.1 Precautions Before Installation
- 5.2 Installation Procedure
- 5.3 Position and Space Required
- 5.4 Connecting Multiple PV Modules to Micro inverter
- 5.5 Installation Tools

06 Micro inverter Installation ---------- 12

- 6.1 Accessories
- 6.2 Plan and Install the Micro inverter
- 6.3 Plan and Build the AC Trunk Cable
- 6.4 Connect PV Modules
- 6.5 Complete the AC Connection
- 6.6 Power On the Solar System
- 6.7 Set Up Monitoring System

07 Fault Handling ---------- 18

- 7.1 Indicator Light
- 7.2 Fault Clearing
- 7.3 Remove the Micro inverter From System
- 7.4 Replace the Micro inverter

08 Warranty Clause ---------- 21

09 Appendix ---------- 22

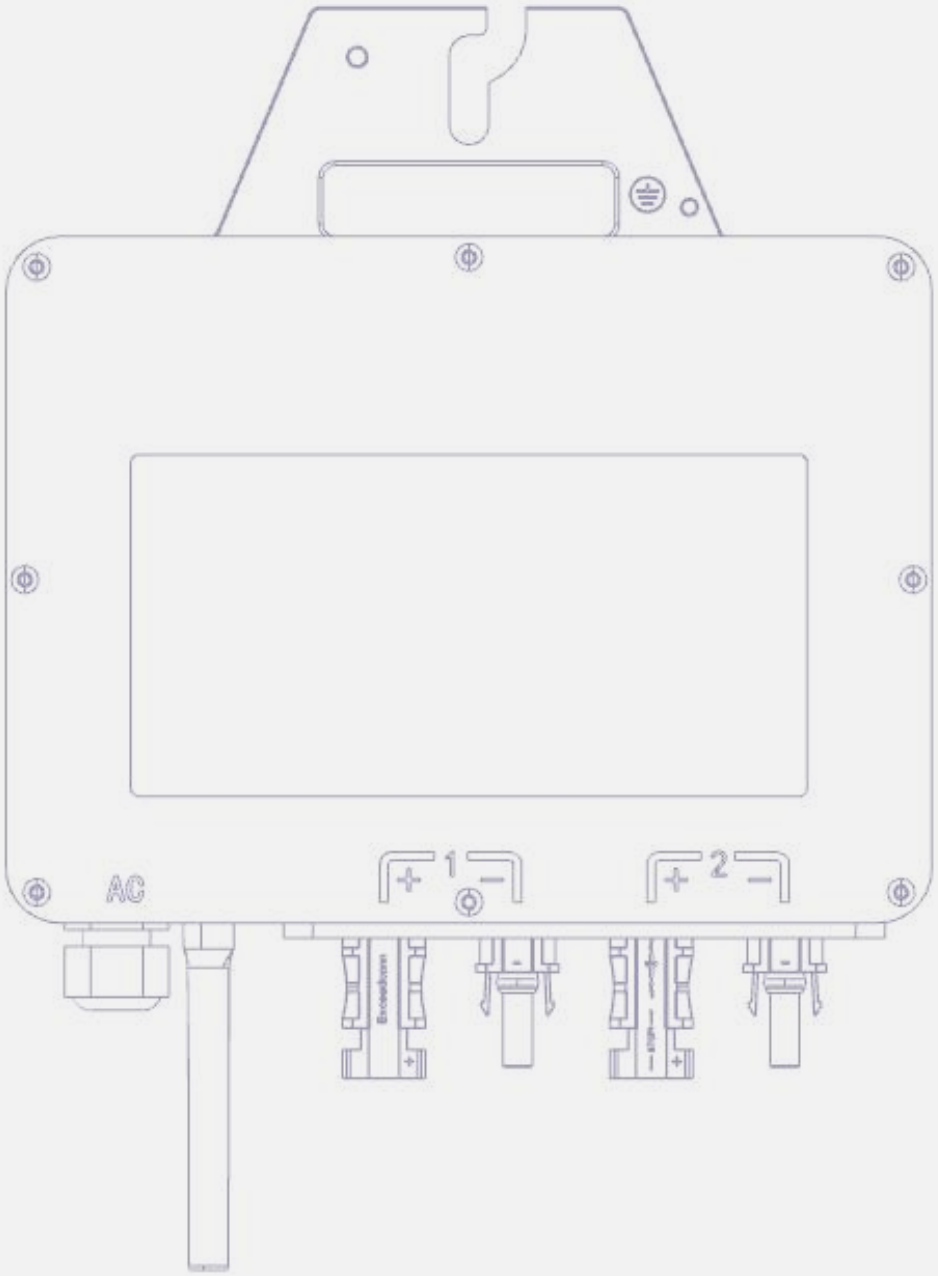

Photovoltaic Micro Inverter

MI2S-600D/700D/800D

Important Safety Instructions

The MI2S-800D series micro inverter is designed and tested according to international safety requirements. However, certain safety precautions must be taken when installing and operating this inverter. The installer must read and follow all instructions, cautions and warnings in this installation manual.

- Ensuring that all tasks related to the transportation, installation, start-up, and maintenance of your equipment are carried out by qualified and trained personnel is of utmost importance.
- It is recommended that you thoroughly inspect the product for any damage that may have occurred during transportation before installation, as this may compromise the insulation integrity and safety clearances, potentially leading to safety hazards. Additionally, it is crucial to carefully select the installation location and adhere to the specified cooling requirements.
- To avoid damaging the equipment and causing serious safety and shock hazards, do not remove necessary protections, engage in improper use, install the equipment incorrectly, or operate it incorrectly. It is essential to obtain necessary approvals from the local power operator before connecting the micro inverter to the power grid, and only qualified technical personnel should make this connection. Installers shall also provide external disconnect switch, overcurrent protection and residual current protection devices.
- To ensure proper functioning of the equipment, each input of the inverter should only be connected to one PV module, and batteries or other sources of power supply should not be connected. It is crucial to observe and apply all technical parameters as specified. Additionally, avoid installing the equipment in flammable, explosive, corrosive, extremely hot/cold, and humid environments, and do not use the equipment if safety devices in these environments are not functioning properly. During installation, it is essential to use personal protective equipment such as gloves and goggles.
- If non-standard installation conditions arise, it is recommended that you inform the manufacturer. Do not use the equipment if any operating anomalies are found. All repairs should be done using qualified spare parts that are installed in accordance with their intended use by a licensed contractor or authorized Rockcore service representative. Any liabilities arising from components not produced by Rockcore are the responsibility of their respective manufacturers.
- Whenever the inverter has been disconnected from the public grid, exercise extreme caution as some components may retain a charge that is sufficient to create a shock hazard. Before touching any part of the inverter, ensure that the surface and the entire equipment are within the limit of safe temperature and voltage potential.
- Note that Rockcore is not liable for any damage caused by incorrect or improper operation. Electrical installation and maintenance should be conducted by licensed electricians and should comply with local wiring rules.

Symbol	Usage
	**Danger of high voltage** High voltage in the micro inverter can cause dangers to life.
	**Caution** Do not come within 8 inches (20 cm) of the micro inverter when it is in operation.
	**Beware of hot surface** The inverter can become hot during operation. Avoid contact with metal surfaces during operation.
	**Read manual first** Please read the installation manual first before installation, operation and maintenance.

1 Summary

MI2S-800D series are micro inverters for rooftop PV systems. The 2-channel independent photovoltaic monitoring, 1-channel MPPT tracking in the device can maximize the energy harvest of PV system and avoid the energy loss from the mismatching and uneven illumination between each panel. The wifi communication in the system enables the individual panel status monitoring and is convenient for system maintenance.

2 Product Feature

High Efficient DC/AC Conversion

- High Efficient DC/AC topology
- Maximum continuous output power 800W
- C-Si/Poly-Si solar PV panel

MPPT

- 2-channel independent photovoltaic monitoring, 1-channel MPPT tracking, achieving maximum power output
- Increase energy gain by 5 to 25%
- Optimized MPPT for low power conditions
- Tracking Accuracy>99. 5%

System Monitor

- Based on wifi network
- APP provided for both Android and IOS platform

High Reliability

- More reliable than traditional PV grid-connected systems
- Shell environment protect grade IP67, suitable for outdoor installation
- Wide operating temperature range,reliable operation from -40 to 65℃

High flexible

- Suitable for residential roofs or other small photovoltaic buildings
- Suitable for large and medium sized BIPV with complex structure
- Easy to install, reduce installation complexity and cost
- Safe for installation personnel. No DC high-voltage access ensures the safety of installation personnel and avoids fire risks caused by high voltage

3 Terminal Introduction

Item	Weight (kg)	L(mm)	W(mm)	H(mm)
MI2S-600D/700D/800D	3	220	220	37

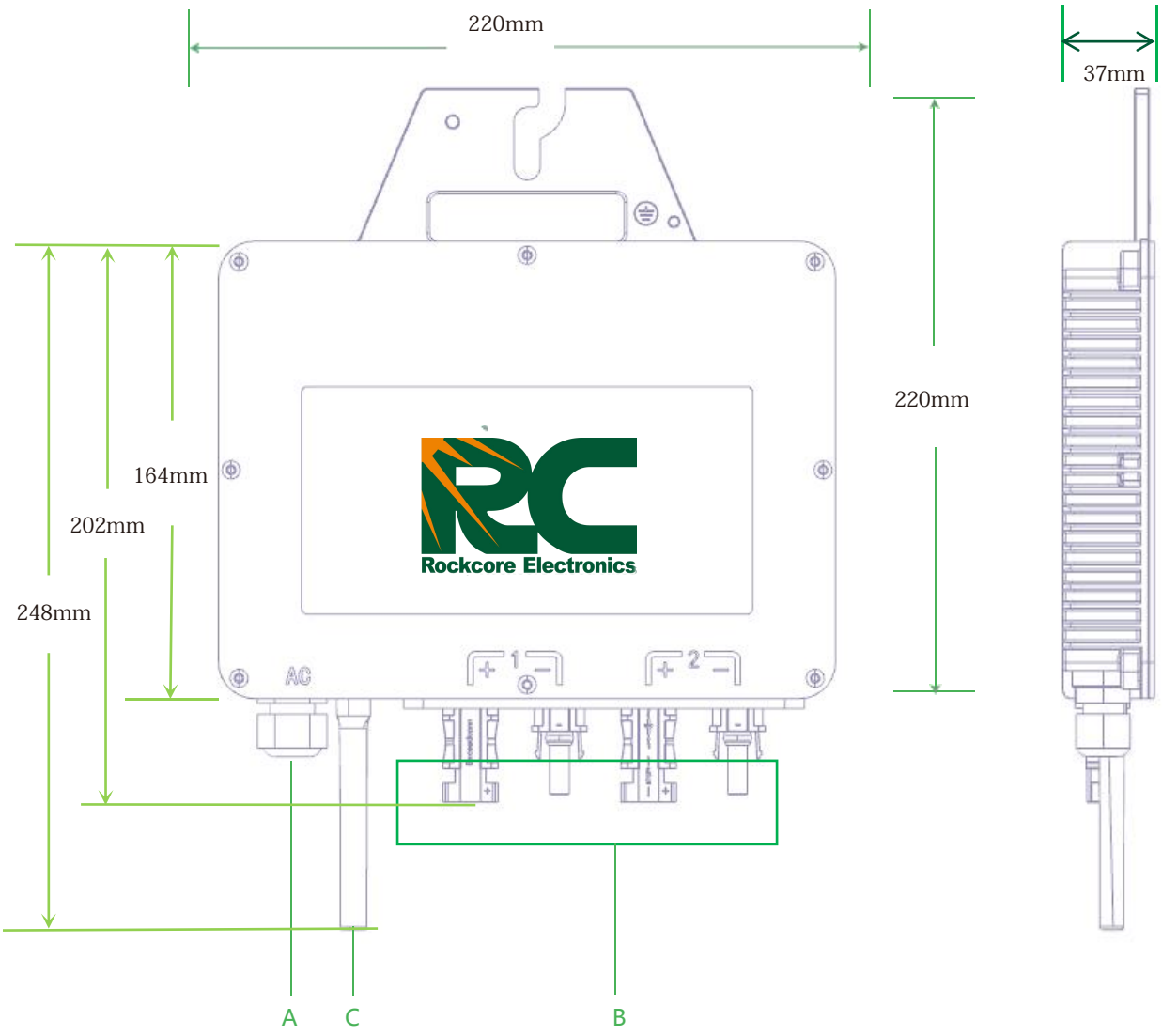

Object	Description
A	AC Connector
B	DC Connector
C	Wi-Fi Wireless

4 Micro inverter system description

Micro inverters are used to form grid-connected photovoltaic power generation systems, and typical distributed grid-connected power generation systems generally include micro inverters, components, accessories, monitoring equipment, cloud systems, etc., as follows:

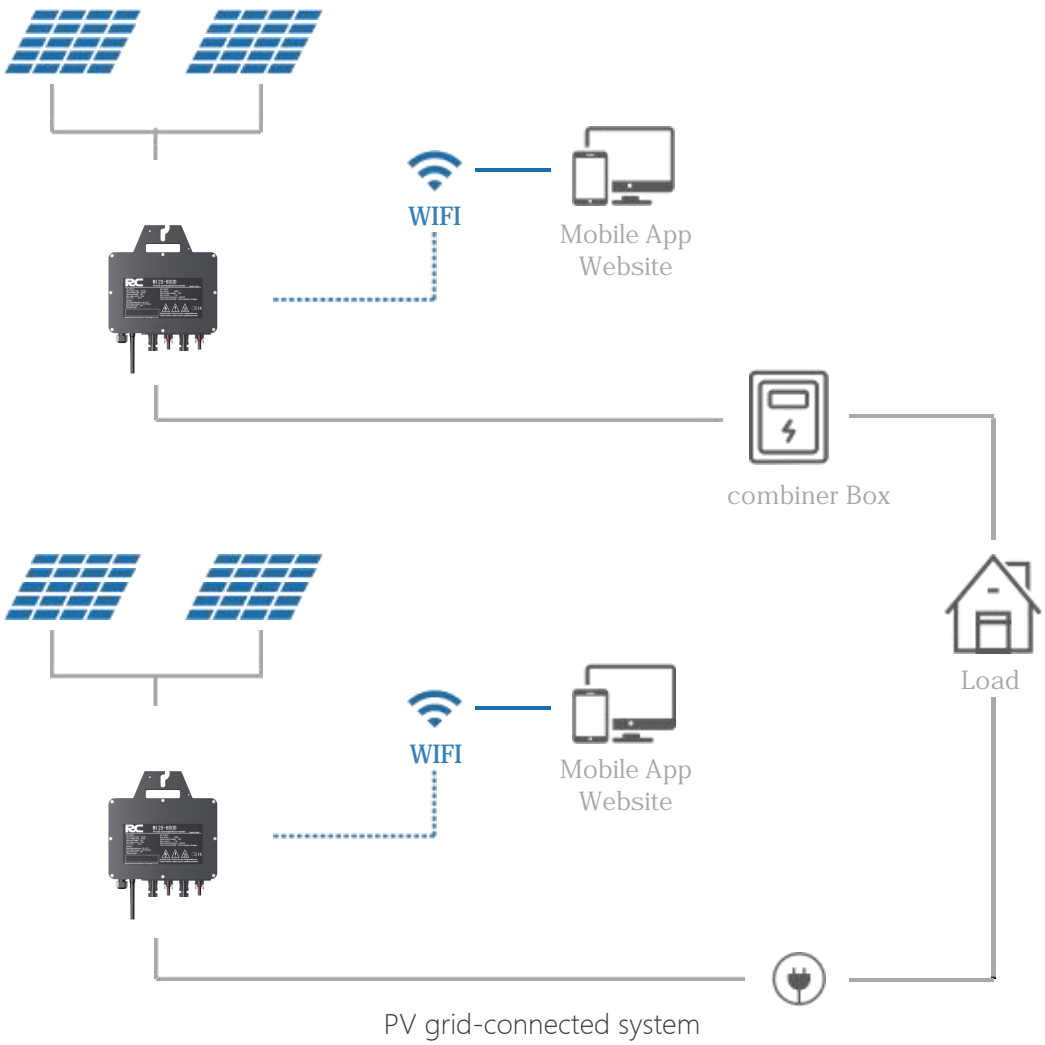

PV grid-connected system

Micro- inverter

- Installed under PV panels
- 1-channel MPPT, increasing energy harvest

Web Server

- Providing database services, uploading inverter data to the server
- Providing web services, real-time access for customers

Client

- Accessing the web server using browser
- Achieving panels status and data analysis

5 Installation Preparation

5.1 Precautions before installation

 DABGER	When installing, ensure that the AC output ground cable of the chassis and device is properly grounded to avoid electric shocks.
 WARNING	Before installing, please read this manual carefully, especially the operation instructions about the warning and attention marks.
 WARNING	All operation and wiring must comply with the relevant national and local standards.
 WARNING	The PV array provides a DC voltage to the micro inverter when illuminated.
 WARNING	Only professional electrical engineers can operate the micro inverter system and grid connection.
 WARNING	When working for a long time in a high temperature environment, the temperature of the terminal will exceed the limit of 60℃ .
 WARNING	The installation position shall not prevent disconnecting the power supply.
 WARNING	No RCD in the micro inverter, you have to prepare it in additional.
 WARNING	No user maintainable parts in the micro inverter, and high voltage may exist. Non-professional maintenance personnel are forbidden to open the shell.
 CAUTION	Suitable for areas below 2000m above sea level, derating if the altitude is higher than 2000m.

5.2 Installation Procedure



Do not connect the micro inverter to the grid until you have ensured that the installation is complete as follows.



Make sure unused T-nodes and ends on the AC bus are sealed and that the AC feeder is powered as long as the system is connected to the grid.

Prepared and fixed the micro inverter to the PV support



The top and bottom of the inverter should be left with at least 10cm of space to make it cooling.



Ensure that the support is in good connection with the micro inverter shell. The support must be grounded for lightning protection.



Do not install the inverter in the position where the sun can directly shine on it.

5.3 Position and Space Required

Please install the micro inverter and all DC connections under the PV module to avoid direct sunlight, rain exposure, snow buildup, UV etc. The label side of the micro inverter should be up and facing the PV module.

Leave a minimum of 10 cm of space around the micro inverter enclosure to ensure ventilation and heat dissipation.

5.4 Connecting Multiple PV Modules to Micro Inverter

① PV modules should be connected to DC input ports of a micro inverter.One PV channel of the inveter is for one PV panel only.

② Use DC extension cable when the original cable is not long enough. Please consult the local power operator to make sure that the DC cable complies with local regulations.

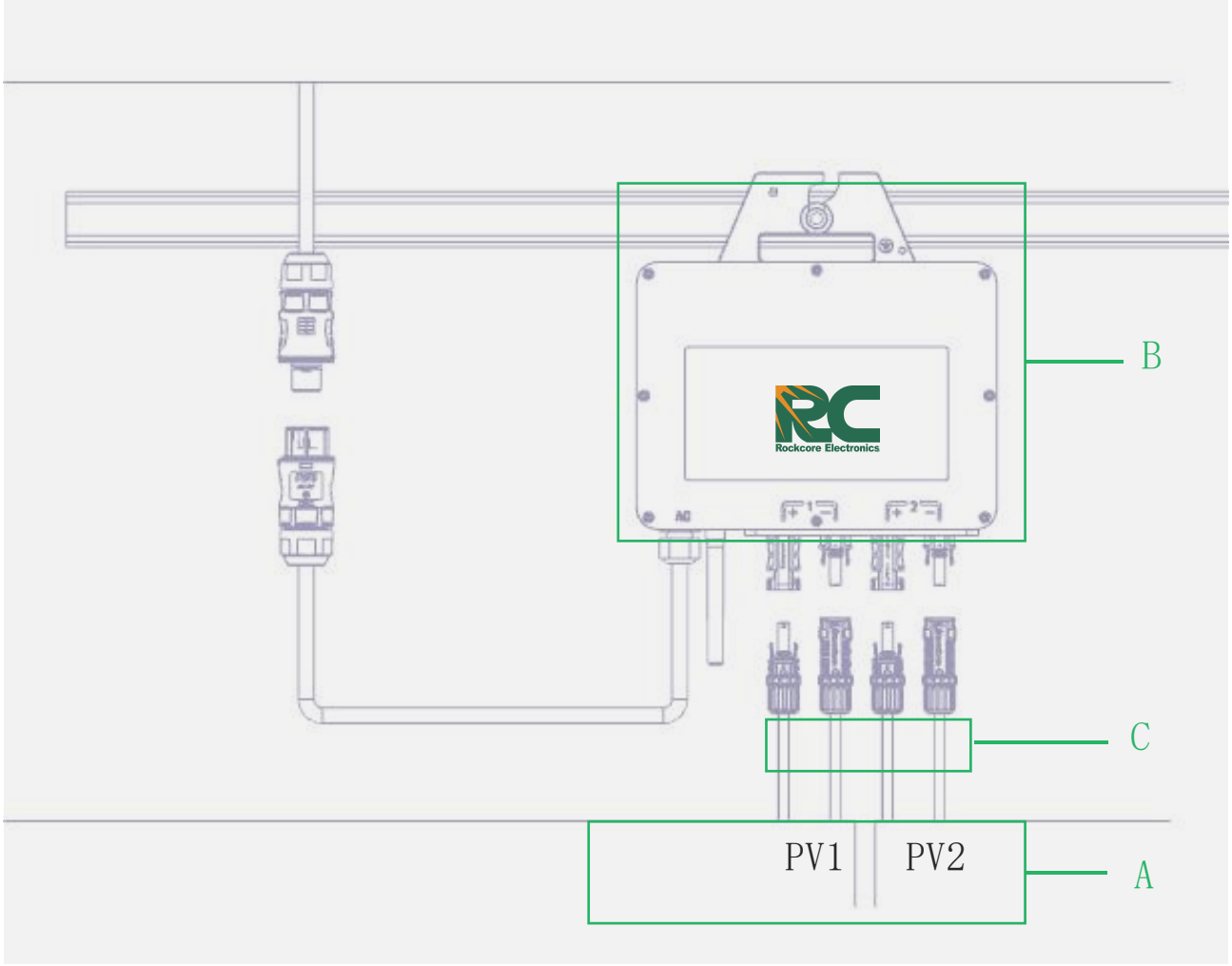

Object	Description
A	PV panel
B	Microinveter
C	DC cable including extension part

CAUTION

The pv panel voltage must not exceed the maximum input voltage of the micro inverter. Otherwise, the micro inverter may be damaged (refer to the absolute maximum input voltage from the Technical Data section).

5.5 Installation tools

The tools recommended refer to below chart.

Socket key or Allen key	Cable tie
Multimeter	Safety glove
Screwdriver	Protective goggles
Diagonal pliers	Safety shoes
Utility knife	Wire striper

MI2S-800D series can be used with 12AWG or 10AWG AC Trunk Cable and the AC Trunk Connector. The number of micro inverters on each 12AWG or 10AWG AC branch shall not exceed the limit as shown below.

	MI2S-600D	MI2S-700D	MI2S-800D	Maximum over current protection device (OCPD)
Maximum number per 12AWG branch	8@220 V 8@230 V 8@240 V	7@220 V 7@230 V 7@240 V	6@220 V 6@230 V 6@240 V	50A
Maximum number per 10AWG branch	10@220 V 10@230 V 10@240 V	9@220 V 9@230 V 9@240 V	8@220 V 8@230 V 8@240 V	60A

The number of micro inverters that can be connected to each AC brach is determined by the ampacity (also known as current-carrying capacity) of the cable. 1-in- 1, 2-in- 1 and 4-in- 1 micro inverters can be connected to the same AC branch, as long as the total current does not exceed the ampacity specified in local regulations.

- ✓ The installation must be done with the equipment disconnected from the grid (power disconnect switch open) and with the PV modules shaded or isolated.
- ✓ Make sure the environmental conditions fit the micro inverter's requirement (degree of protection, temperature, humidity, altitude, etc.) as specified in the Technical Data section.
- ✓ Avoid direct sunlight to prevent power derating which can be caused by an increase in the internal temperature of the micro inverter.
- ✓ Keep the inverter in well-ventilated place to avoid overheating.
- ✓ Keep the inverter away from gases or flammable substances.
- ✓ Avoid electromagnetic interference because it can compromise the normal operation of electronic equipment.

Installation location shall meet the following conditions:

- ✓ Install only on structures specifically designed for PV modules (supplied by installation techni- cians).
- ✓ Install micro inverter underneath PV modules to make sure it works in the shadow. Nonobservance may cause the derating of inverter production.

6 Micro Inverter Installation

6.1 Accessories

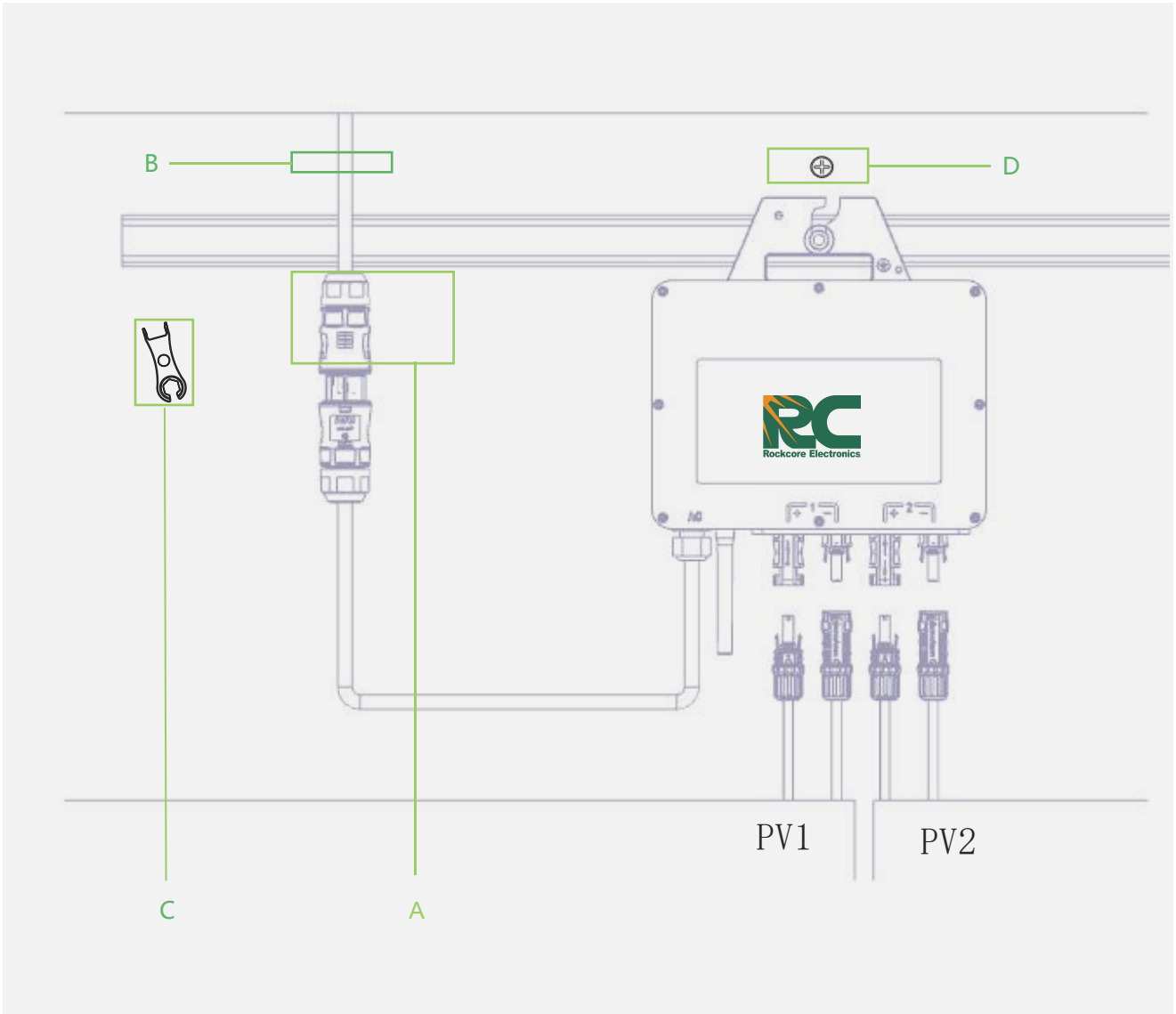

Item	Description
A	AC Trunk Connector
B	AC Trunk Cable, 12/10 AWG Cable
C	AC Trunk Port Disconnect Tool
D	M8 × 25 screws (Prepared by the installer)
*Note: All accessories above are not included in the package and should be purchased separately.	

6.2 Plan and Install the Micro Inverter

① According to the position of PV module junction box and the installation mode of the support,pay attention to the gap between the PV modules in the middle position, and roughly mark the installation position of the micro inverter.
② Fix the screw to the guide rail.

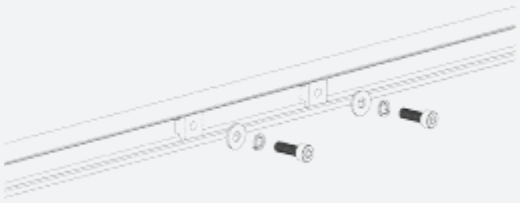

③ Hang the micro inverter on the screw and tighten the screw.

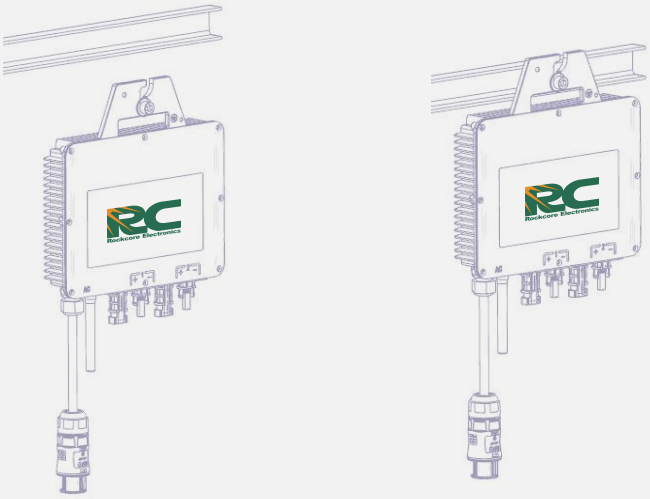

The AC cable contains earth wire, so grounding can be done directly with it.

CAUTION

Micro inverter installation and DC connections must be done under the PV module to avoid direct sunlight, rain exposure, snow buildup,UV etc.

CAUTION

Leave a minimum of 10 cm of space around the micro inverter enclosure to ensure ventilation and heat dissipation.

CAUTION

Mounting torque of the 8 mm screw is 9 N •m. Do not over-torque.

CAUTION

Do not pull or hold the AC cable with your hand. Hold the handle instead.

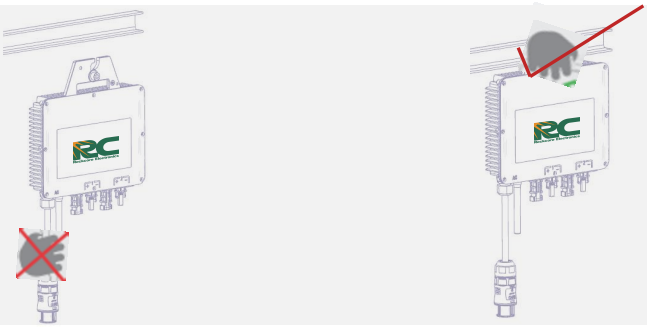

6.3 Plan and Build the AC Trunk Cable

AC Trunk Cable is used to connect the micro inverter to the power distribution box.

A) Select the appropriate AC Trunk Cable according to the spacing between micro inverters. The connectors of the AC Trunk Cable should be spaced based on the spacing between micro inverters to ensure that they can be properly matched. (Rockcore provides AC Trunk Cable with different AC Trunk Connector spacing.)

B) Determine how many micro inverters you plan to install on each AC branch and prepare AC Trunk connectors accordingly.

C) Take out segments of AC Trunk Cable as you need to make AC branch.

① Strip cables：Only multiple strands of copper wire can be used. Please cut and strip the wire according to the requirements, and the ground wire needs to be 5mm longer than live and naught wire, and the applicable stripping length is 7 ~ 8mm.

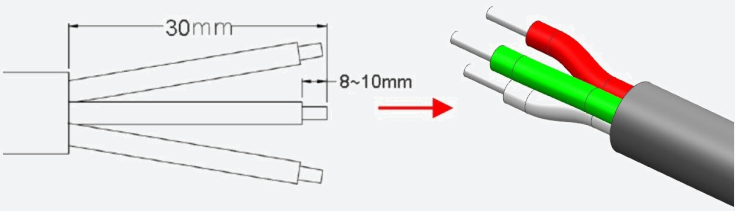

② Instruction of cable connector assembly：Screwing off the tail parts (End Locker,) from male or female cable connector， and then pulling the wire which was cut and stripped through them in turn.

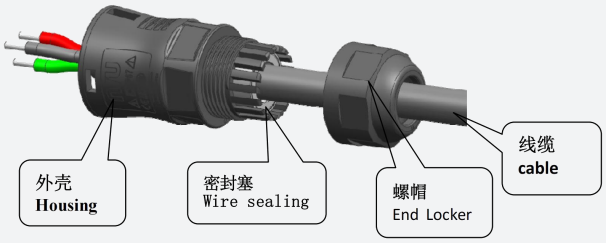

③ Crimp the wire: Inserting the stripped wires correctly into the corresponding pin holes according to the identification and then tightening all screws firmly, Screw twisting torque 0.4±0.1N·m. after it , giving a reverse pull force lightly (about 10N) by manual to test crimping result. Please pay attention to avoiding damage of pins and pin-holder. After crimping, The tensile strength shall meet the requirements listed in the followingtable：

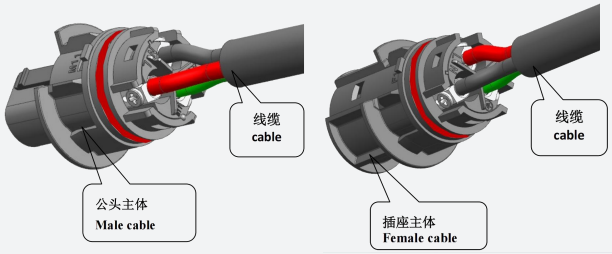

Conductor cross-section area (mm2)	Required tensile strength (N)
2.5	> 50
4.0	> 60

④ Install male & female cable body to plastic housing: Push the male or female cable body into housing body correctly according to the position of theclamping groove , and will hear a crisp “click” sound in place.

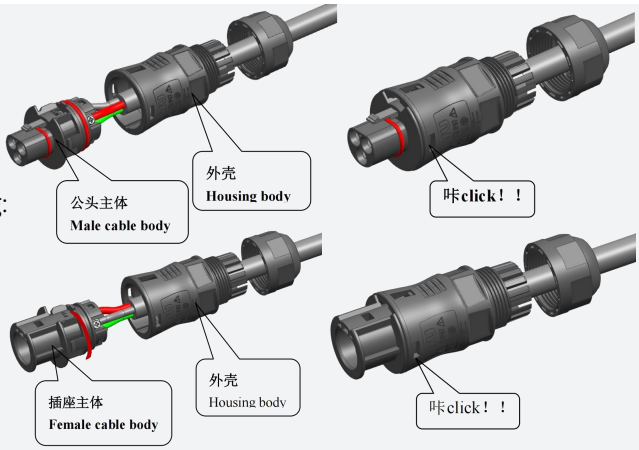

⑤ Push the sealing body and sealing craw into the housing body, and then tighten the end locker,torque 4.0±0.5N·m.



⑥ When mating connectors, align mate-locker on the male connector with grooves on the female connector, and insert gradually.Connected in place, there will be a sound of "click".

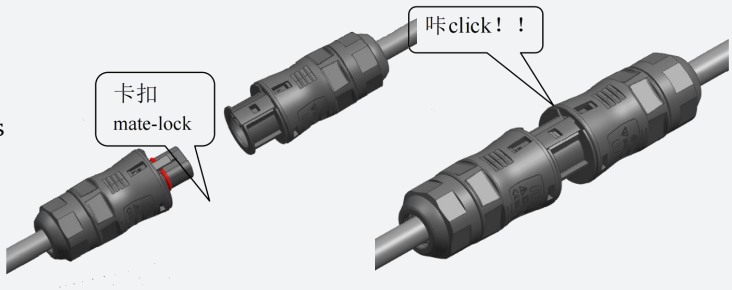

⑦ If the connectors are separated, choose a corresponding flat screwdriver to push mate-locker step slightly out of position, and then give a force along the axial direction until separation.

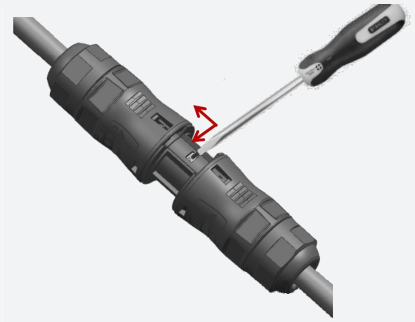

⑧ If the connector to be disassembly for rewire, please according to the following steps:
Loosen tail parts (End Locker,);
Use a suitable flat screwdriver to press the elastic tongue on the male or female cable body inward and push forward slightly, and when the tongue comes off a little,use the same method to the tongue on other side.Give a force along the axial direction until separation.

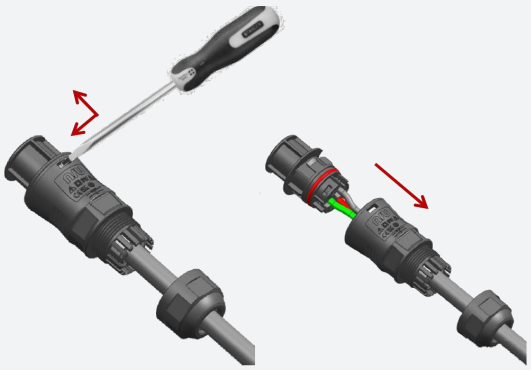

CAUTION

Please ensure the inverter system is not under working conditions firstly when installing connectors, The human body cannot simultaneously contact the connector's positive and negative
pole , in order to avoid electric shock accidents.

CAUTION

Please do not separate and mate the connector system frequently if not for repairing or maintenance reason which may reduce the waterproof performance of the system.

6.4 Connect PV Modules

Connect the PV modules' DC cables to the DC terminals of the micro inverter.

> WARNING
> Make sure the PVn+ and PVn- of the same PV channel is corresponding to the same PV panel or it will damage the inveter.

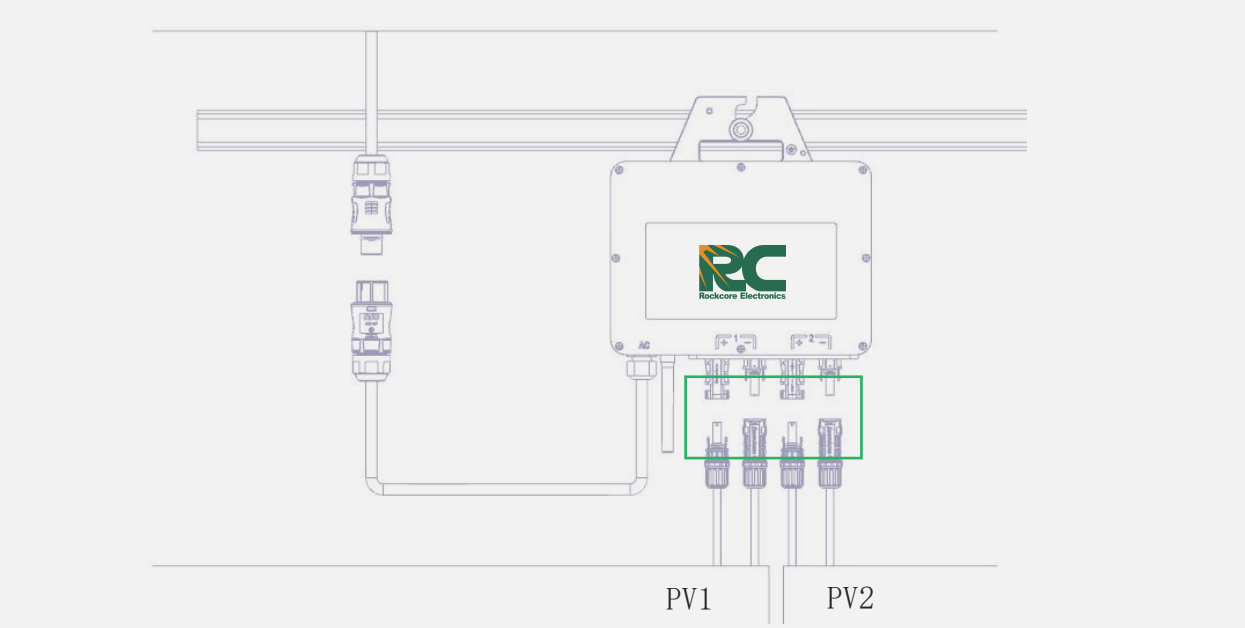

6.5 Complete the AC Connection

A) Plug the AC Sub Connector of the micro inverter into the AC Trunk connector until you hear the click.

B) Connect the AC end cable to the distribution box, and wire it to the local grid network.

C) Please plug the AC Trunk Port Cap in any vacant AC Trunk Port to make it water and dust proof.

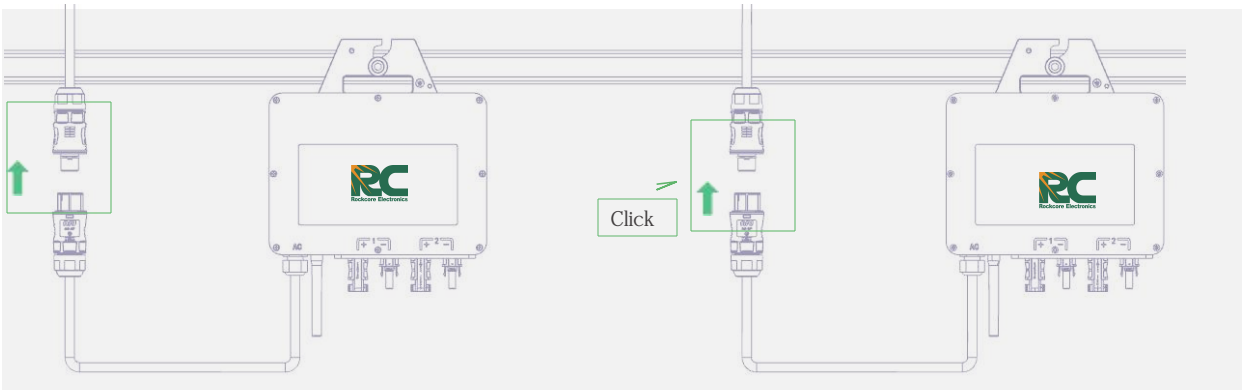

> CAUTION
> Make sure that the AC Trunk Connectors are kept away from any drainage channels.

> CAUTION
> If you want to remove the micro inverter AC cable from AC Trunk Connector, insert the AC Trunk Port Disconnect Tool into the AC Sub Connector to complete the removal.

6.6 Power on the solar system

A) Check the installation of each branch of the system to ensure that the connection is correct and reliable.

B) Turn on the main connection circuit breaker of the AC bus box.

C) Turn on the AC circuit breakers for each branch of the AC bus box.

D) If the DC input voltage of the inverter is within the working voltage range, the system will start to generate power several minutes after the AC is switched on.

WARNING Only qualified personnel can connect the inverter to the power grid.

WARNING Before connecting the system to the grid, ensure that all AC and DC connections are correct and not damaged. Make sure all junction boxes are connected.

WARNING If there is a poor Wi- Fi signal strength， please contact the network operator and ask about the network problems.If the WiFi signal is still weak,try to add a Wi-Fi booster to your network.

CAUTION If the DC input voltage of the inverter is higher than the minimum startup voltage, the status indicator on the inverter blinks green within two minutes.（This time varies by region of sale）

CAUTION Make sure that the AC Trunk Connectors are kept away from any drainage channels.

CAUTION If you need to remove the micro inverter AC cable from AC Trunk Connector, insert the AC Trunk Port Disconnect Tool into the AC Sub Connector to complete the removal.

6.7 Set up Monitoring System

A) Collect the serial number of each micro inverter in the current project.

B) Fill the serial number label of every inveter to the respective location on the installation map (please refer to the appendix).

C) Scan the Quick Response code to download and install the RC-C application.After finishing installation, please update the RC-C applation to the latest version.

D) Connect the micro inverter to the the network by RC-C application.Please refer to the RC-C Operating Guide to set up monitoring system about this process.

Apple Store

Android

The function of port 80 as the default open port of the device indicates that this port opens with the device's startup and closes with the device's shutdown.

7 Fault Handling



Only qualified electrical engineers can connect the micro inverter system to the grid.

7.1 Indicator light

Status of the inverter during operation are showed by Red and Green lights display.

Information Classifying	Display Mode	Condition
Power On	Red green yellow flashes once in turn, with an interval of 1 second.	Initialization completed
Runing	Green light flashing, interval of 1 second.	Producing power
Warning	Red light flashing, interval of 1 second.	Waiting for the grid

7.2 Fault Clearing



Before maintaining the PV system, disconnect all circuit breakers in the bus box.



Do not disconnect the DC terminal when the inverter is working. It is best to cover the PV module with an opaque object before disconnecting the DC side terminal.



Do not try to repair the micro inverter. If the fault cannot be rectified, please contact our customer service. We will replace the products according to the situation.



The inverter gets power from the DC side. If the DC voltage is within the working voltage range
of the inverter, the green LED flashes five times after the inverter is connected to the DC side, CAUTION indicating that the initialization is normal.

In case of a fault,the following steps can eliminate the inverter fault：

① Check whether the voltage and frequency of the grid are in the normal range .

② Check each connection . First cut off the main circuit breaker of the confluence box, and then disconnect the circuit breaker of each branch .

③ Check whether the DC terminal connection of the faulty inverter is abnormal . Cut off the DC terminal and check whether the open circuit voltage of the PV module is within the normal starting range of the inverter. If it is normal, reconnect . After the inverter is powered on, you can observe the indicator status. If the indicator blinks red, green and yellow one by one, the power-on initialization is complete and the inverter enters the normal working state. Check the AC connection then . .

④ Check connection between the junction box of the branch to see if the faulty inverter is abnormal . Please do not operate while connected to the grid . Turn on the branch circuit breaker and the main circuit breaker.

⑤ Reclose the branch circuit breaker and the main circuit breaker.

⑥ You can contact us if the fault still appears .

7.3 Remove the micro inverter from system



The AC end of the inverter and the connector of the AC bus are firm and waterproof, must use special tools to remove, brute force disassembly will cause damage.

Follow these steps to remove the inverter installed in the system：

①Cut off the main circuit breaker of the confluence box and the circuit breaker of each branch .

②Cut off the connector between the AC bus and the AC cable connecting the junction box to ensure that the system is off the AC grid .

③Remove the AC terminals of the inverter from the AC bus using a special tool .

④Cover the PV module to which the inverter is connected with an opaque object .

⑤Measure the DC terminal with the DC current clamp to ensure no current between the PV module and the inverter.

⑥Cut off the DC terminal between the PV module and the inverter.

⑦ Remove the inverter from the bracket .

⑧If you do not install a new micro inverter, use the AC bus node seal cover to seal the open node .

7.4 Replace the micro inverter

Follow below steps to replace new inverter：

①Remove the fault inverter from the bracket .

②Install new inverter.

③Mark the serie no of the two inverters .

④Connect the AC bus and the AC cable connecting the junction box with a dedicated connector.

⑤Turn on the circuit breaker and main circuit breaker of each branch of the confluence box.

⑥Replace the inverter sequence number on the server, and the new inverter will be input the system to replace the original inverter.

8 Warranty Clause

The normal working conditions of the micro inverter must conform to the regulations in the manual. Rockcore's quality assurance covers both process and material defects. The warranty period is 12 years from the original purchase date at the end user's original installation location. During the warranty period, as long as the original installation location is unchanged, such as the system changes the customer, the warranty is also valid.

During the warranty period, Rockcore will repair or replace the defective product free of charge at its choice as long as the defect covered by the warranty is confirmed to exist by inspection. Rockcore reserves the right to use the original or improved design in repairing and replacing defective products. The warranty period of the repaired or replaced product shall extend the original warranty period or 90 days from the date of repair or replacement, whichever is longer. The warranty covers replacement of parts and repair of defects, but does not cover removal of defective products and installation of repaired or replaced products. The warranty also covers non-expedited shipping charges for repaired and replaced products, with shippers chosen by Rockcore.

The warranty does not cover transportation damage or damage caused by the shipping company, such damage is the responsibility of the carrier.

In order to obtain repair and replacement services during the warranty period, the customer must comply with the following regulations:

- All defective products must be returned and replaced through the Returned Product Authorization code. Before obtaining the authorization code, the customer needs to contact our technical support personnel for on-site evaluation and troubleshooting.
- If the fault cannot be rectified on site, the customer shall provide the following information to request the return product authorization code:
  - ✓ Purchase certification of the defective product:
    The original purchase receipt for the sale to the end customer
    Distributor invoice or receipt which showed the original manufatcure
    Purchase invoice or receipt date shows that the replacement product date is within the warranty date
  - ✓ Defective products mode
  - ✓ Defective products series number
  - ✓ Detailed description for the defective producr

Product repair and replacement mailing address:

- All defective products that are authorized to be returned must be shipped in their original package.
- Customers are not allowed to disassemble or repair defective products without prior written authorization from our company.
- Our company will not be responsible for the following circumstances:
  - ✓ Internal or external damage caused by changes due to improper use
  - ✓ Improper installation and operation, including use in conditions outside the product design and inappropriate environment conditions, and failure to comply with user manual or laws and regulations

- ✓ Suffering from fire, flood, corrosion, insect infestation or input voltage exceeding the maximum limit of this product
- ✓ Damage caused by defects in other parts of the solar system
- ✓ The original product logo (including the trademark and serial number) has been destroyed, changed or deleted This warranty does not cover related handling, installation, or customer's power system fault diagnosis costs
- ✓ The warranty will not exceed the cost of the original micro inverter

This Limited warranty is the sole and exclusive warranty given by Rockcore and permitted by law. is made expressly replace of all other warranties, express or implied, statutory or otherwise, including, without limitation, warranties of title, quality, merchant ability, fitness for a particular purpose or non-infringement, or warranties as to the accuracy, sufficiency, or suitability of any technical or other information provided in manuals or other documentation. In no event will Rockcore be liable for any special, direct, indirect, incidental or consequential damages, losses, costs, or expenses, however arising, whether in contract or tort, including without limitation any economic losses of any kind, any loss or damage to property, or any personal injury. Some jurisdictions do not allow limitations or exclusions on implied warranties or on the duration of an implied warranty or on the limitation or exclusion of certain damages, so the above limitation(s) or exclusion(s) may not apply.

Rockcore Electronics

Bulit-in Wi-Fi Module Micro Inverter Installation Map

Ver1.1

Please Make
N for North



Customer Information:

COLUMN / ROW	1	2	3	4	5	6	7	8	9	10	11	12	13	14	15	16
A																
B																
C																
D																